0 601 381 003 / 903

Stand / Issue ~~09-08~~ 13-12-02

Fig./Abb. 1

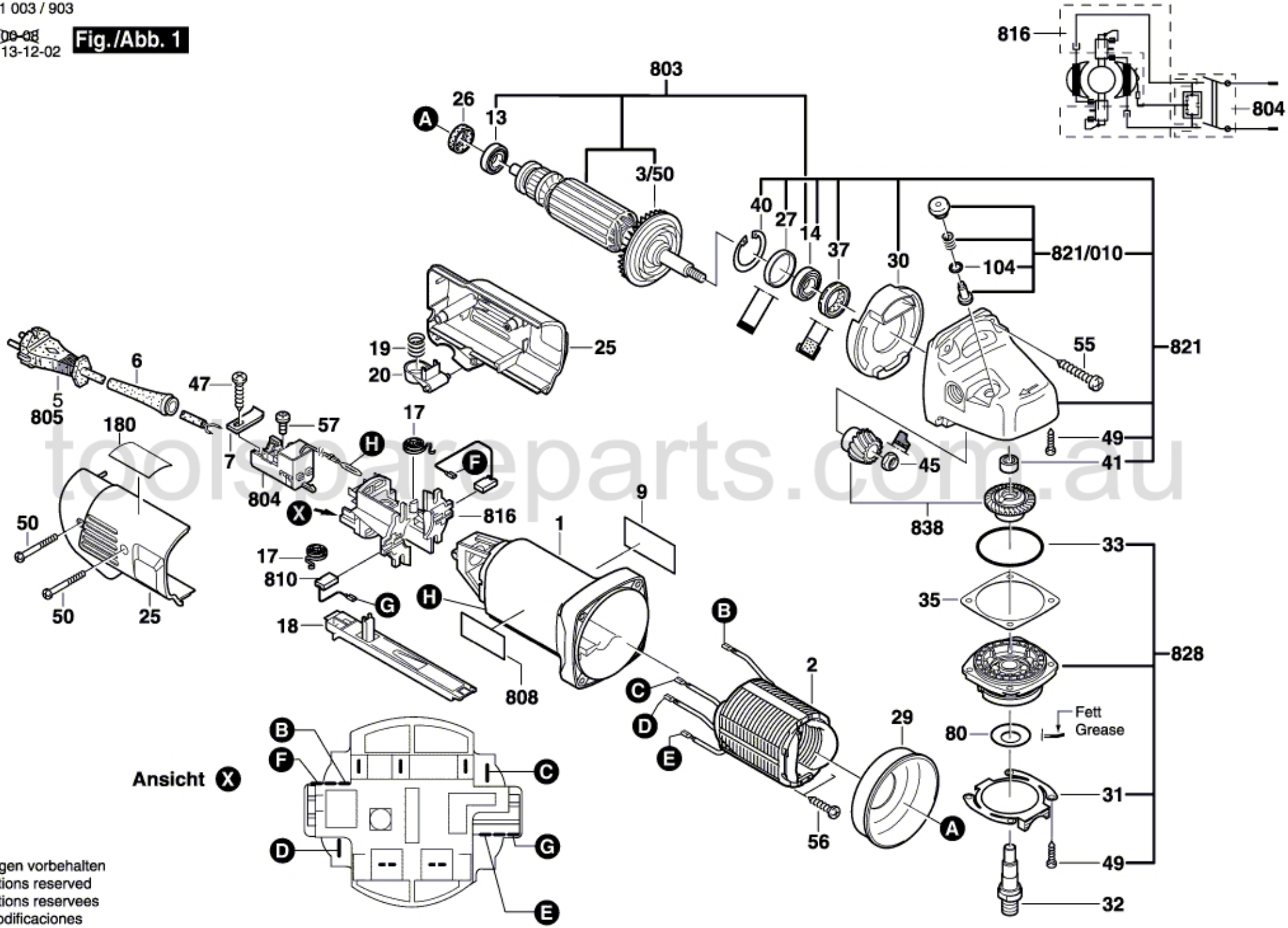

toolspareparts.com.au

Änderungen vorbehalten
Modifications reserved
Modifications reservees
Salvo modificaciones